D-Link

Quick Start Guide

DWL-6720AP

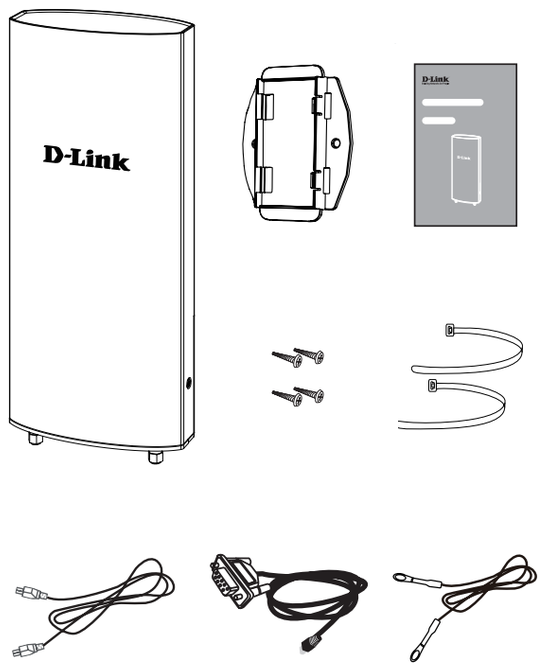

1

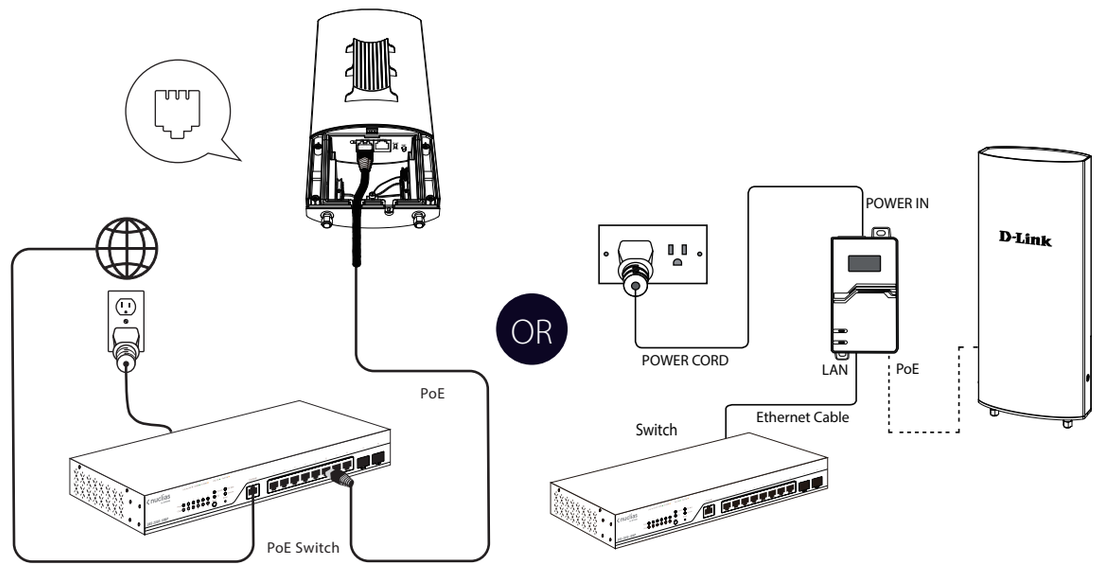

2

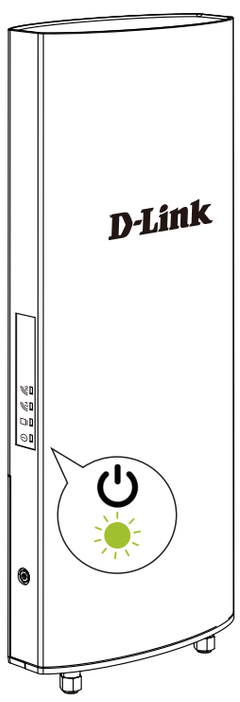

3

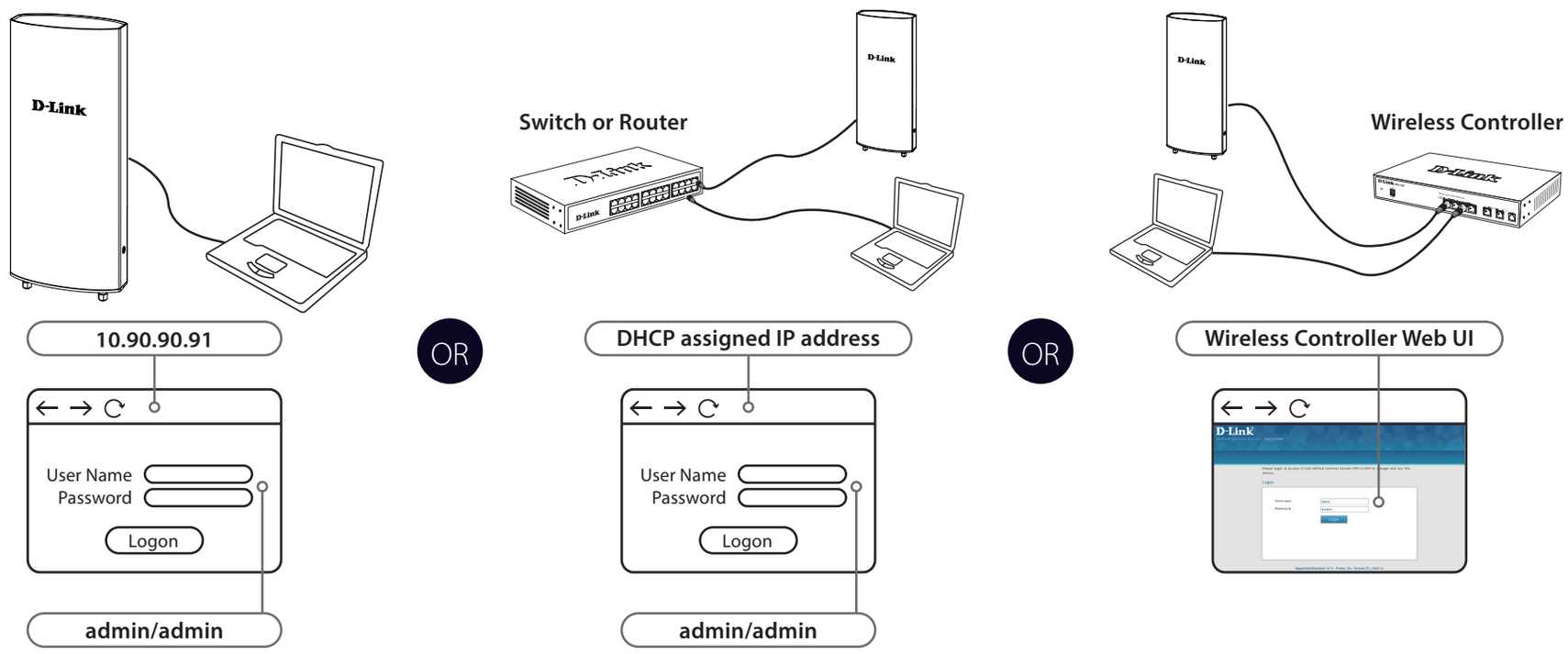

1

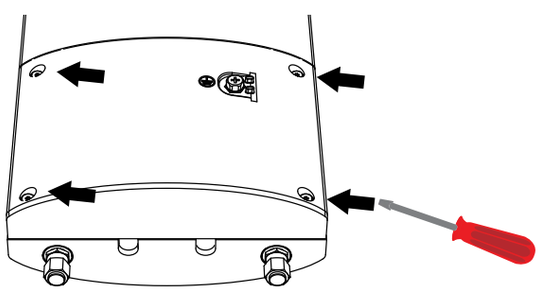

2

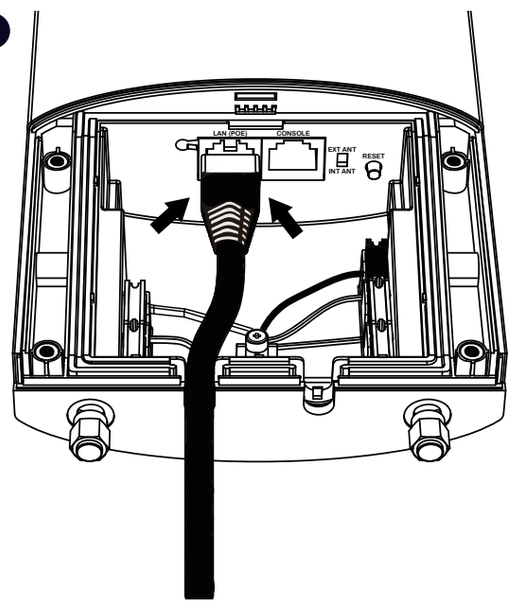

3

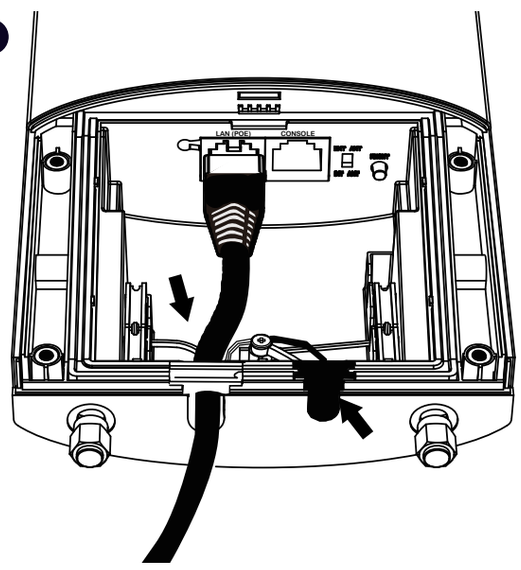

4

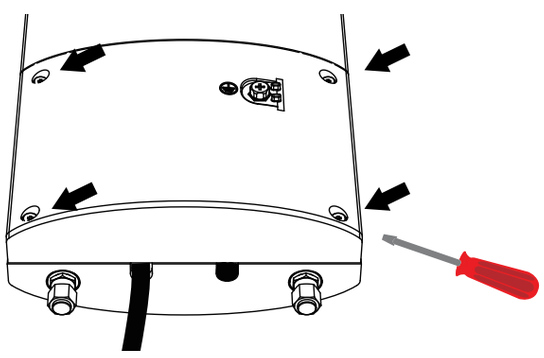

5

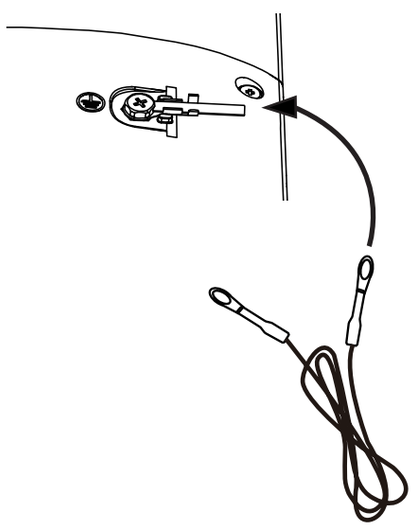

6a

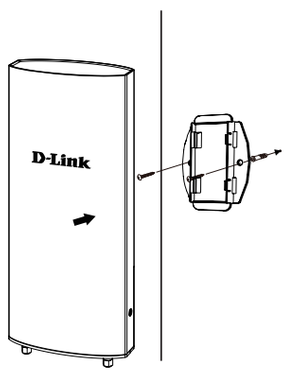

6b

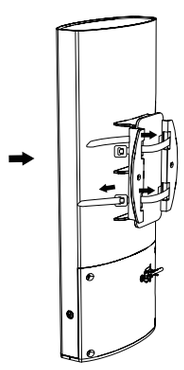

OR

6a

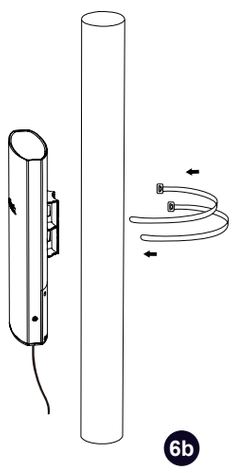

6b

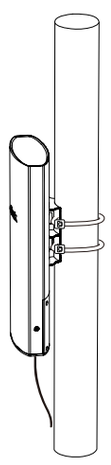

https://www.dlink.com/support

https://www.dlink.com/warranty

Ver 2.00(WW)_90x130 2020/09/28 290726006720A12